Santa Cruz V2 Hightower / Juliana V2 Maverick LT Link Install

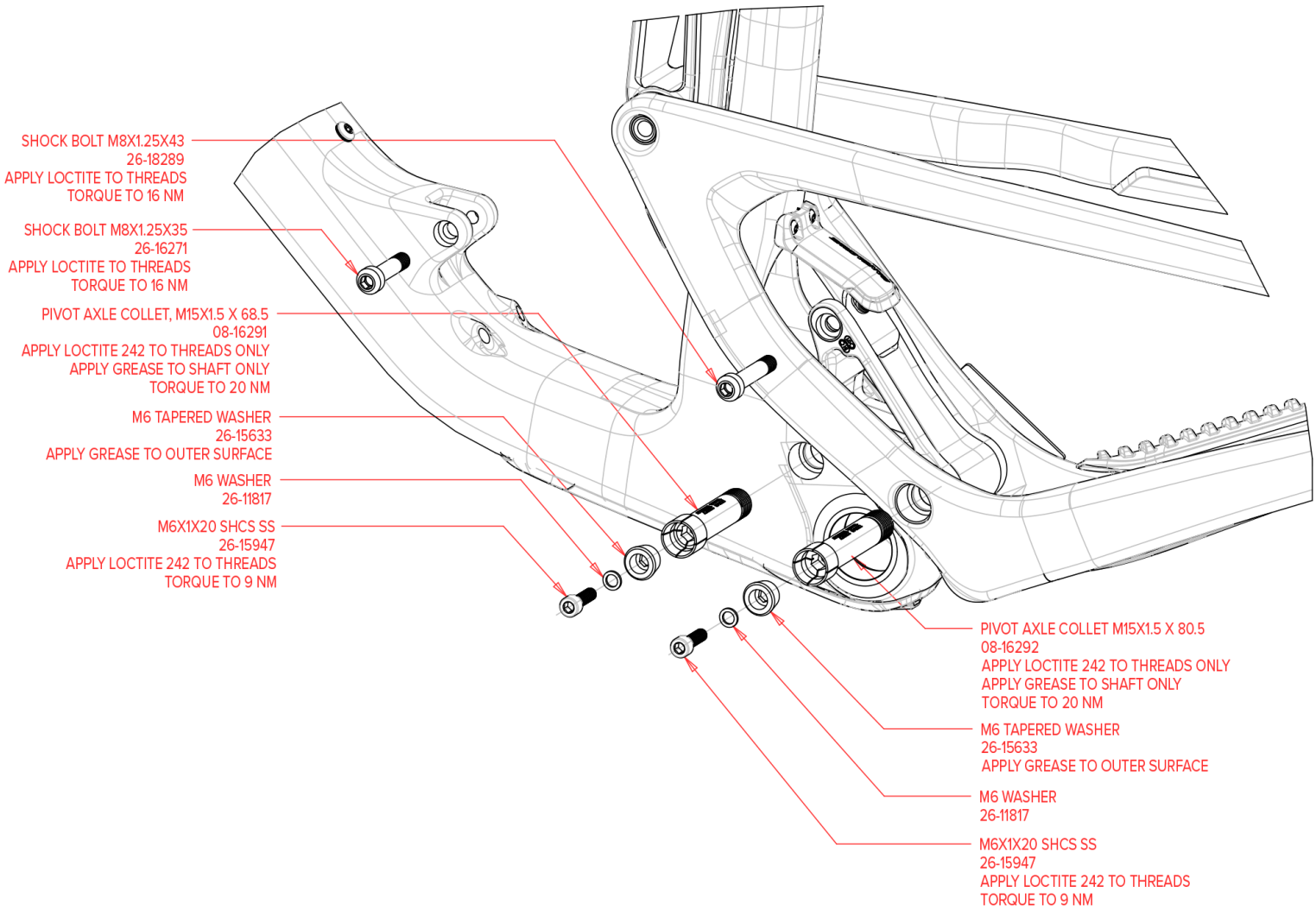

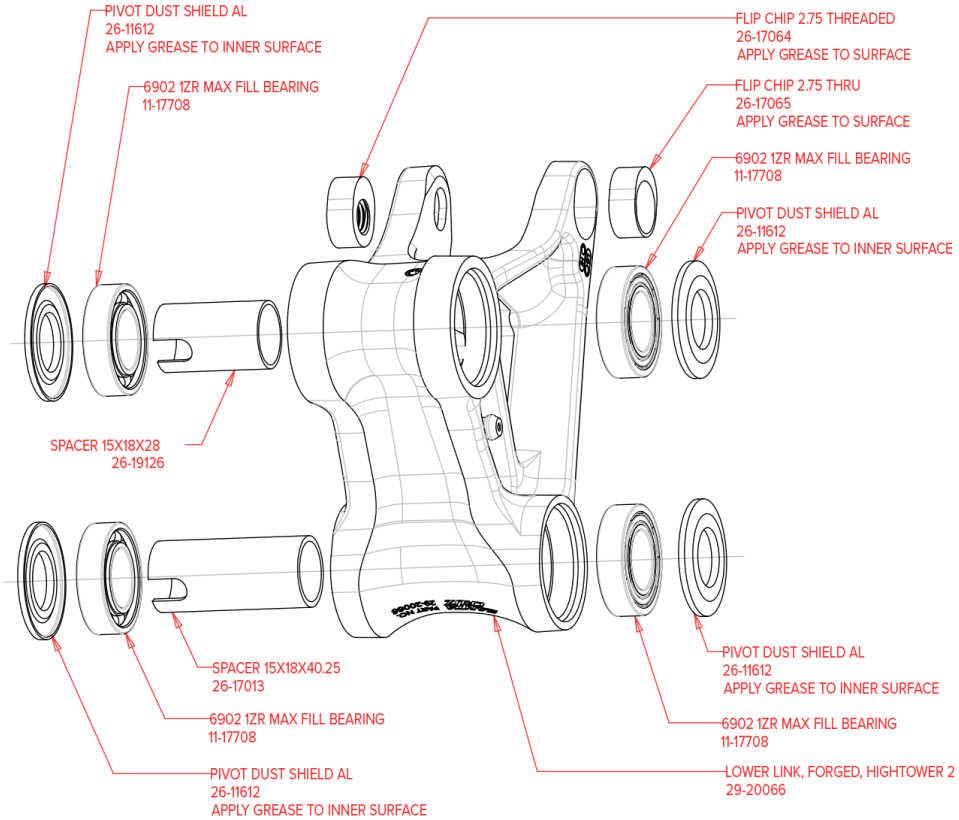
PIVOT DUST SHIELD AL
26-11612
APPLY GREASE TO INNER SURFACE
6902 1ZR MAX FILL BEARING
11-17708
SPACER 15X18X28
26-19126
SPACER 15X18X40.25
26-17013
6902 1ZR MAX FILL BEARING
11-17708
PIVOT DUST SHIELD AL
26-11612
APPLY GREASE TO INNER SURFACE
FLIP CHIP 2.75 THREADED
26-17064
APPLY GREASE TO SURFACE
FLIP CHIP 2.75 THRU
26-17065
APPLY GREASE TO SURFACE
6902 1ZR MAX FILL BEARING
11-17708
PIVOT DUST SHIELD AL
26-11612
APPLY GREASE TO INNER SURFACE
PIVOT DUST SHIELD AL
26-11612
APPLY GREASE TO INNER SURFACE
6902 1ZR MAX FILL BEARING
11-17708
LOWER LINK, FORGED, HIGHTOWER 2
29-20066

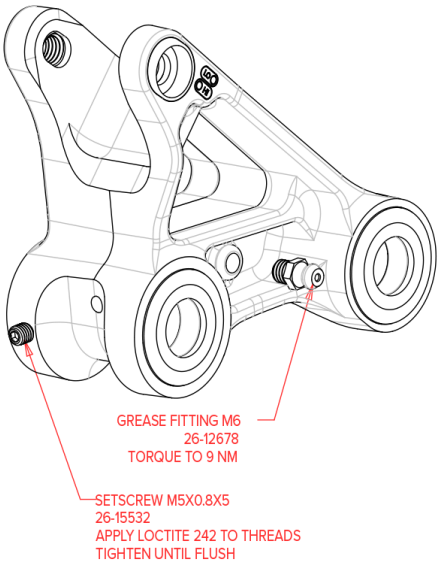
GREASE FITTING M6
26-12678
TORQUE TO 9 NM
SETSCREW M5X0.8X5
26-15532
APPLY LOCTITE 242 TO THREADS
TIGHTEN UNTIL FLUSH