Santa Cruz V4 Tallboy LT Link Install

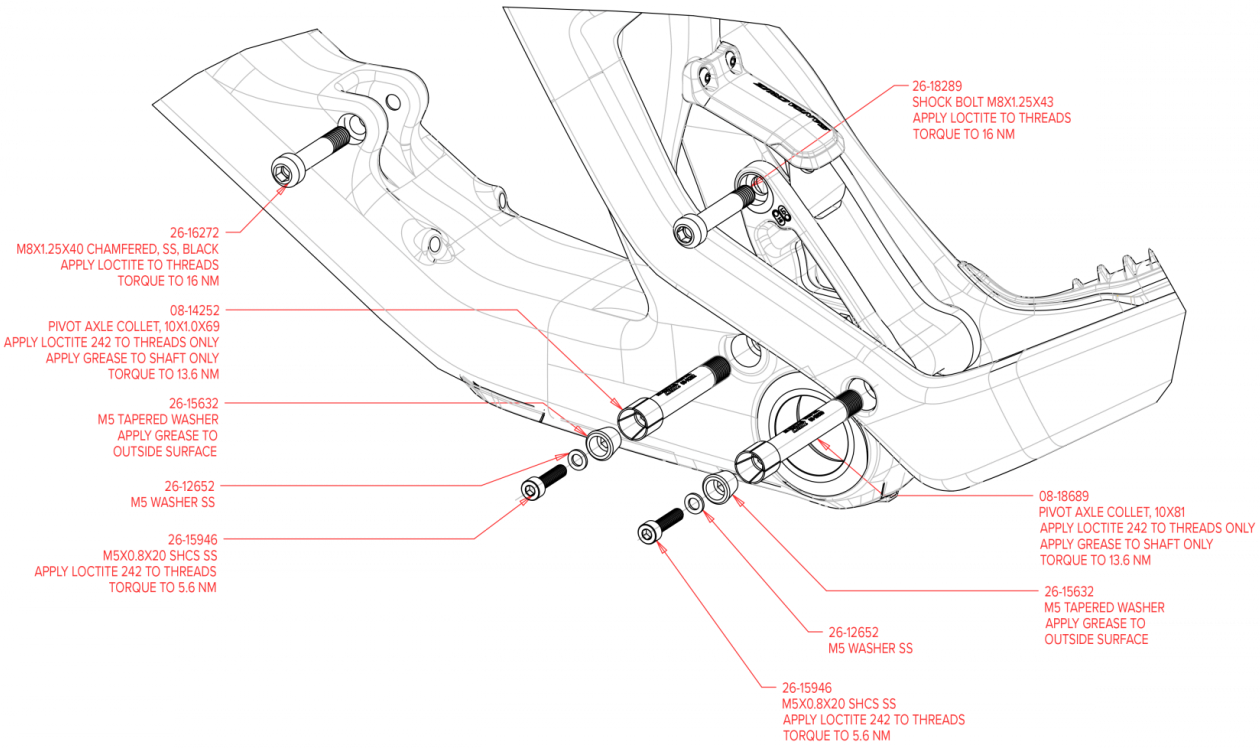

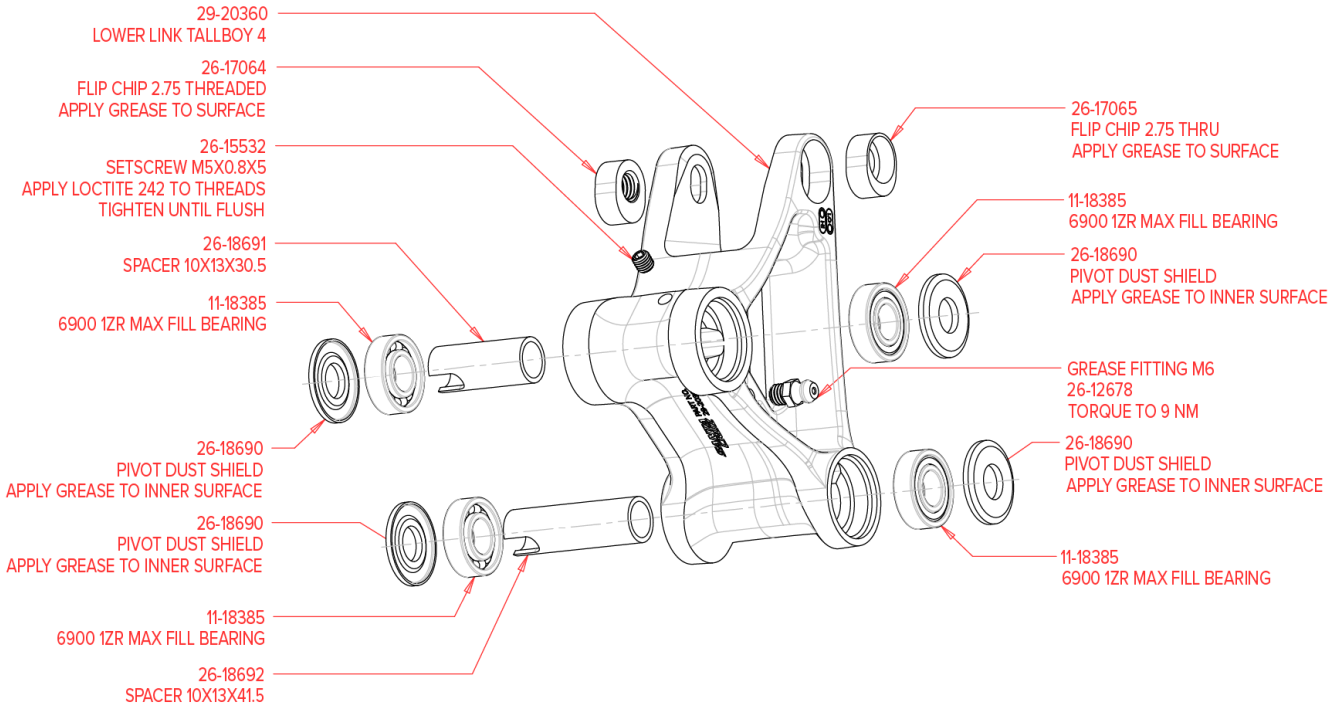
29-20360
LOWER LINK TALLBOY 4
26-17064
FLIP CHIP 2.75 THREADED
APPLY GREASE TO SURFACE
26-15532
SETSCREW M5X0.8X5
APPLY LOCTITE 242 TO THREADS
TIGHTEN UNTIL FLUSH
26-18691
SPACER 10X13X30.5
11-18385
6900 1ZR MAX FILL BEARING
26-18690
PIVOT DUST SHIELD
APPLY GREASE TO INNER SURFACE
26-18690
PIVOT DUST SHIELD
APPLY GREASE TO INNER SURFACE
11-18385
6900 1ZR MAX FILL BEARING
26-18692
SPACER 10X13X41.5
26-17065
FLIP CHIP 2.75 THRU
APPLY GREASE TO SURFACE
11-18385
6900 1ZR MAX FILL BEARING
26-18690
PIVOT DUST SHIELD
APPLY GREASE TO INNER SURFACE
GREASE FITTING M6
26-12678
TORQUE TO 9 NM
26-18690
PIVOT DUST SHIELD
APPLY GREASE TO INNER SURFACE
11-18385
6900 1ZR MAX FILL BEARING