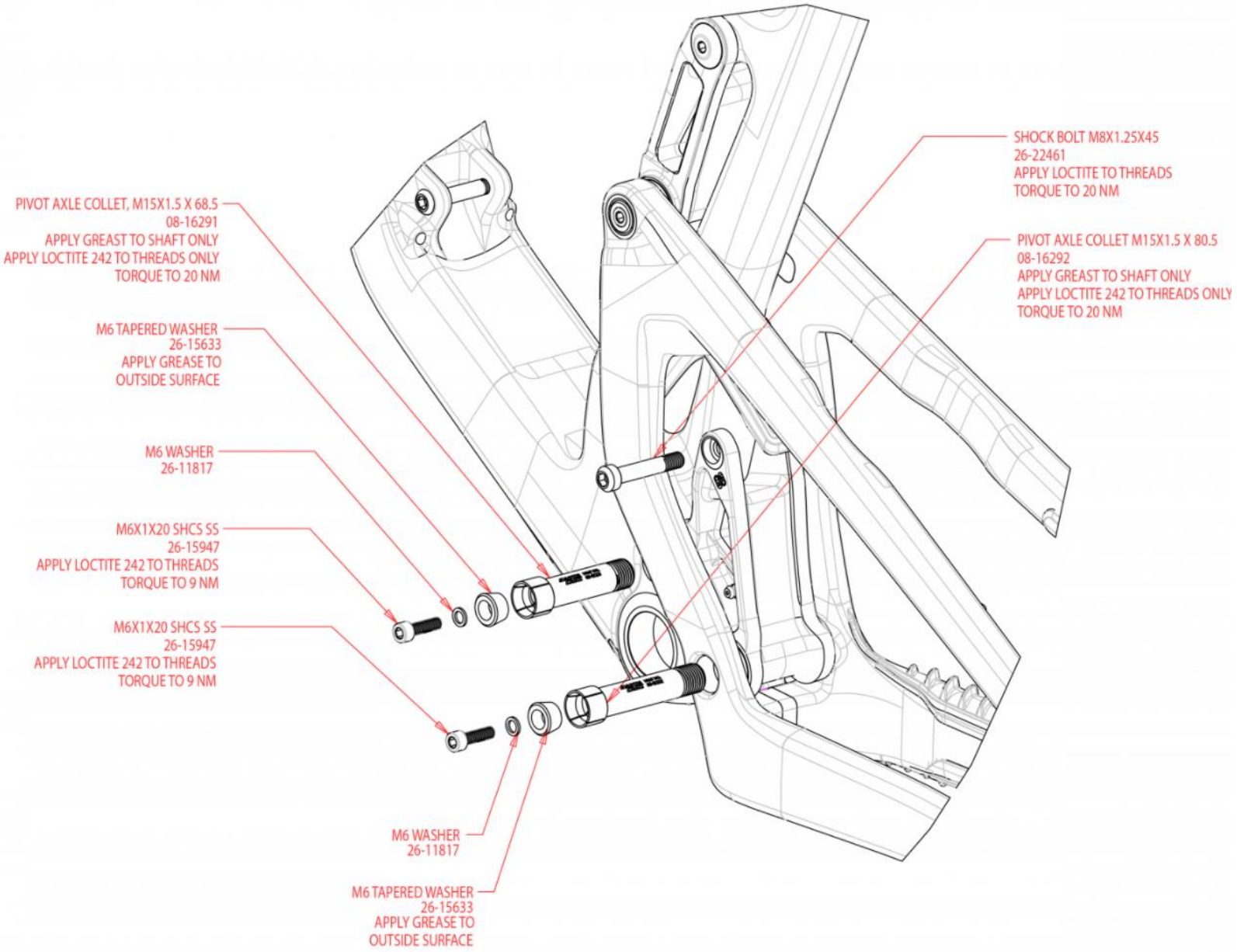
SHOCK BOLT M8X1.25X45
26-22461
APPLY LOCTITE TO THREADS
TORQUE TO 20 NM
PIVOT AXLE COLLET M15X1.5 X 80.5
08-16292
APPLY GREAST TO SHAFT ONLY
APPLY LOCTITE 242 TO THREADS ONLY
TORQUE TO 20 NM
PIVOT AXLE COLLET, M15X1.5 X 68.5
08-16291
APPLY GREAST TO SHAFT ONLY
APPLY LOCTITE 242 TO THREADS ONLY
TORQUE TO 20 NM
M6 TAPERED WASHER
26-15633
APPLY GREASE TO
OUTSIDE SURFACE
M6 WASHER
26-11817
M6X1X20 SHCS SS
26-15947
APPLY LOCTITE 242 TO THREADS
TORQUE TO 9 NM
M6X1X20 SHCS SS
26-15947
APPLY LOCTITE 242 TO THREADS
TORQUE TO 9 NM
M6 WASHER
26-11817
M6 TAPERED WASHER
26-15633
APPLY GREASE TO
OUTSIDE SURFACE